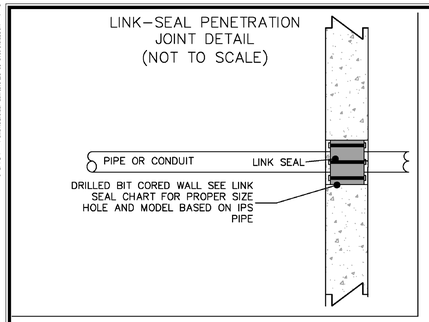

- 2 INCH CONDUIT WITH SWEEP ELBOW (PUMP POWER).
- 1–1/2 INCH CONDUIT WITH SWEEP ELBOW (GROUND).
- 1 INCH CONDUIT WITH SWEEP ELBOW (IRRIGATION CONTROLLER POWER).
- 2 INCH CONDUIT WITH SWEEP ELBOW (WELL POWER).
- 1–1/2 INCH CONDUIT WITH SWEEP ELBOW (SPARE).
- 1–1/2 INCH CONDUIT WITH SWEEP ELBOW (ELECTRONIC BUTTERFLY VALVE).
- 1–INCH CONDUIT WITH SWEEP ELBOW (FLOW SENSOR).
- 1–INCH CONDUIT WITH SWEEP ELBOW (WELL FLOW SENSOR).
- 1–INCH CONDUIT WITH SWEEP ELBOW (CABINET HEATER).

SLAB REINFORCED CONCRETE AND REINFORCEMENT NOTES

1. UNLESS NOTED OTHERWISE, ALL CONCRETE WORK, DETAILING, FABRICATION, AND PLACING OF REINFORCING AND CONCRETE SHALL BE GOVERNED BY THE LATEST REVISIONS OF:
   A. ACI 318–14
   B. CRSI RECOMMENDED PRACTICE OF PLACING REINFORCING BARS
   C. ACI 305, 306 FOR HOT AND COLD WEATHER CONCRETING, RESPECTIVELY
2. USE PORTLAND CEMENT TYPE 1.
2. ALL CONCRETE SHALL BE NORMAL WEIGHT WITH A MAXIMUM UNIT WEIGHT OF 150 POUNDS PER CUBIC FOOT (PCF) AND SHALL HAVE A MINIMUM 28–DAY COMPRESSIVE STRENGTH OF 4,000 PSI.
3. PROVIDE A ¾" CHAMFER AT ALL EXPOSED CONCRETE CORNERS.
4. CLEAR COVER TO STEEL BARS SHALL BE 3 INCHES.
5. REINFORCING STEEL SHALL CONFORM TO ASTM A–1064 AND SHALL BE GRADE 60 WITH A MINIMUM YIELD STRESS OF 60 KSI.
6. ALL REINFORCEMENT SHALL BE SECURELY SUPPORTED IN ITS CORRECT POSITION BY REVIEWED AND ACCEPTED MEANS BEFORE PLACING CONCRETE.
7. WELDING OF WIRE MESHES SHALL NOT BE PERMITTED.
8. 6" THICK SLAB SHALL BE POURED ON 6" TRANSIT–LEVEL SUBGRADE BED OF ¾" CRUSHED STONE OVERLAIN BY AN 8–MIL VAPOR BARRIER AND CUT 3" FROM ALL EDGES.

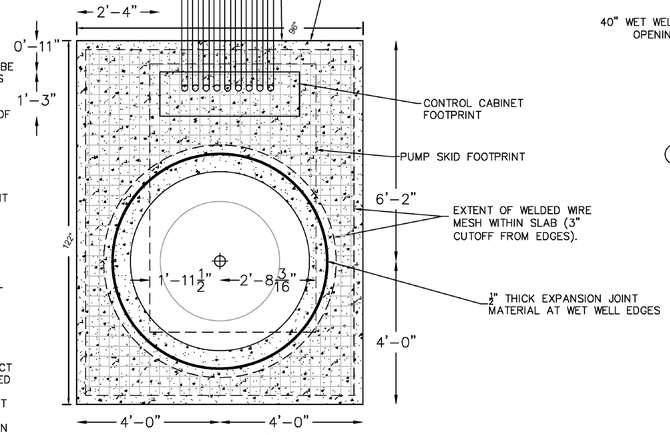

CONCRETE PAD DESIGN
(1/2"=1')

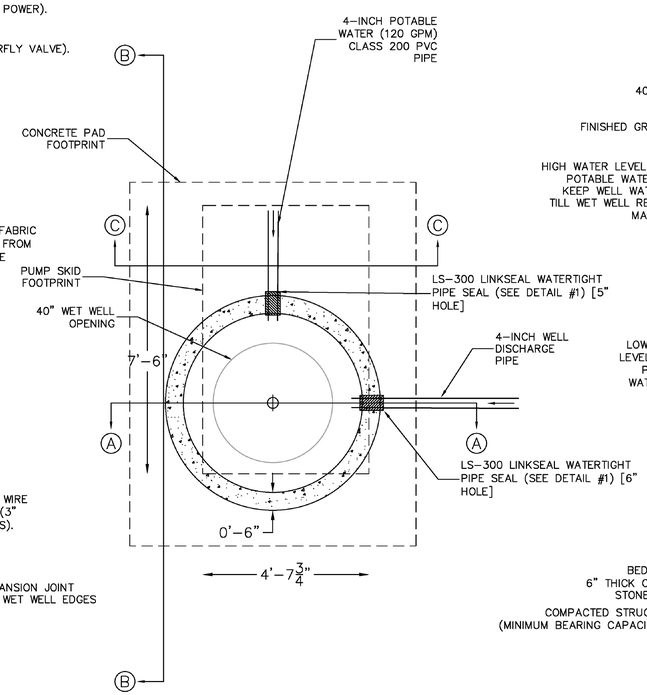

PRECAST WET WELL
TOP VIEW (1/2"=1')

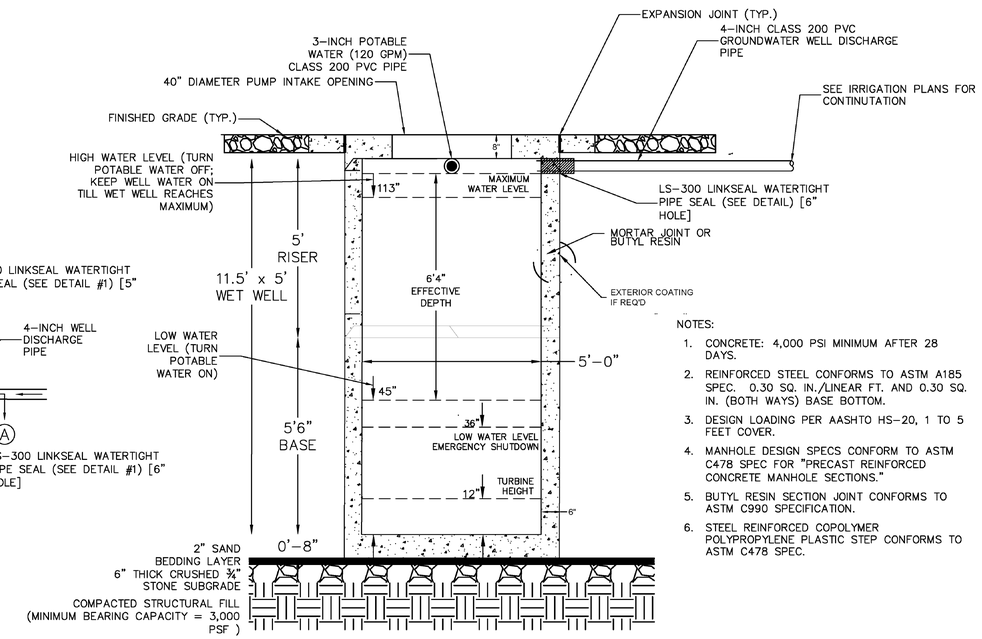

NOTES:

1. CONCRETE: 4,000 PSI MINIMUM AFTER 28 DAYS.
2. REINFORCED STEEL CONFORMS TO ASTM A185 SPEC. 0.30 SQ. IN./LINEAR FT. AND 0.30 SQ. IN. (BOTH WAYS) BASE BOTTOM.
3. DESIGN LOADING PER AASHTO HS–20, 1 TO 5 FEET COVER.
4. MANHOLE DESIGN SPECS CONFORM TO ASTM C478 SPEC FOR "PRECAST REINFORCED CONCRETE MANHOLE SECTIONS."
5. BUTYL RESIN SECTION JOINT CONFORMS TO ASTM C990 SPECIFICATION.
6. STEEL REINFORCED COPOLYMER POLYPROPYLENE PLASTIC STEP CONFORMS TO ASTM C478 SPEC.

PRE–CAST WET WELL
SECTION A–A (1/2"=1')

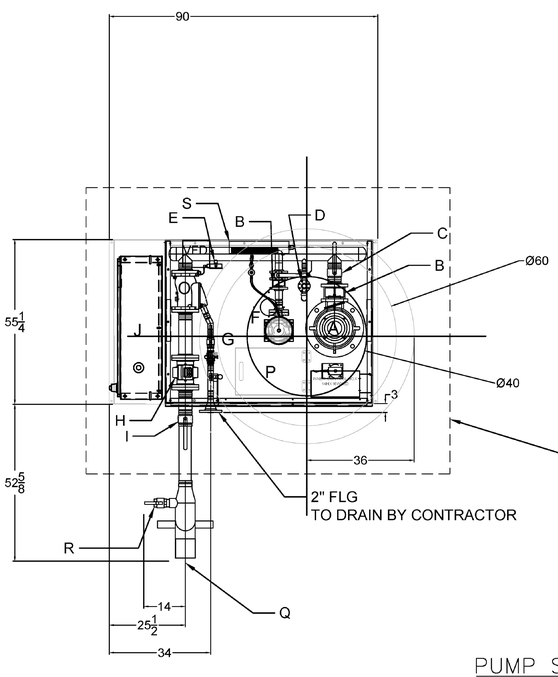

STATION COMPONENTS:
A 20HP PUMP AND MOTOR
B CHECK VALVE
C BFV 4"
D PRESSURE RELIEF VALVE 1"
E PRESSURE TRANSDUCER W/ GAUGE
F 5 HP VMS SUSTAIN PUMP
G LEVEL SENSOR
H SIEMENS MAG METER
I STATION ISOLATION VALVE 4"
J CONTROL CABINET (DEAD FRONT)
K ENCLOSURE FAN
L STATION ENCLOSURE
M STATION BASE
N 2" SUCTION LINE W/ FOOT VALVE
O 4" WYE STRAINER W/ SCREEN
P WET WELL ACCESS HATCH
Q 4" X 6" DROP PIPE, 24" BURY
R 2" APOLLO BALL VALVE
S 500W HEATER
T VANDAL RESISTANT ALARM LIGHT

STATION TOTAL PERFORMANCE:
220 GPM @ 80 PSI
PUMP HORSEPOWER:
PUMP NO.1: 20HP
SUSTAIN PUMP: 5 HP
CHECK VALVE SIZE
PUMP NO.1: 4"
SUSTAIN PUMP 2"
ISOLATION VALVE SIZES:
SUSTAIN PUMP: 2"
PUMP NO.1: 4"
DISCHARGE ISOLATION VALVE: 4"
RELIEF VALVE SIZE: 1"
PUMP STATION DISCONNECT: 100 AMP
POWER REQUIREMENTS: 460 V, 60 HZ, 3 PZ, 76 FLA
EXHAUST FAN REQUIREMENTS: 425 CFM

PUMP SKID TOP VIEW
(1/2"=1')

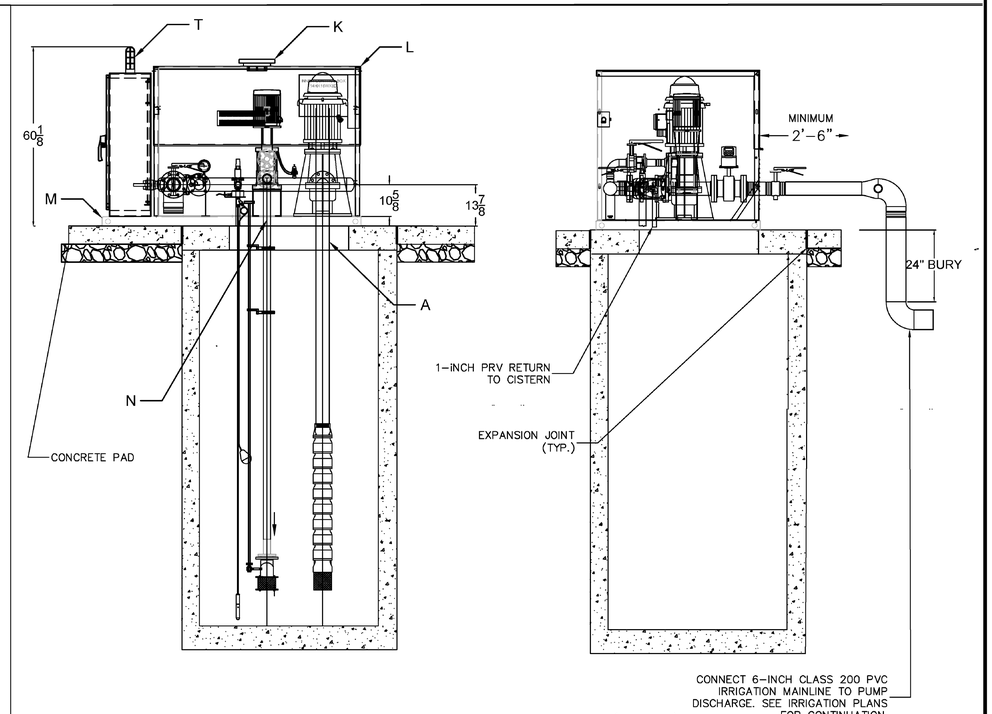

PUMP SKID SECTION B–B (LEFT)
AND C–C (RIGHT) SIDE VIEWS
(1/2"=1')

DESCRIPTION	DATE	BY

IRRIGATION PUMPING DETAILS

WOLF SWAMP PARK
RENOVATION OF THE ATHLETIC FIELDS
735 LONGMEADOW STREET
LONGMEADOW, MASSACHUSETTS

SOG	SOG	BEV
DESIGNED	DRAWN	CHECKED

SCALE: AS NOTED
DATE: JUNE 30 ,2020
PROJECT NO.: 6213-05
SHEET NO.: 21 OF 21
SHEET NAME: IR-6